PRODUCTFICHE
FICHE PRODUIT

HEKON
JOUW EXPERT IN ROOKGASAFVOER

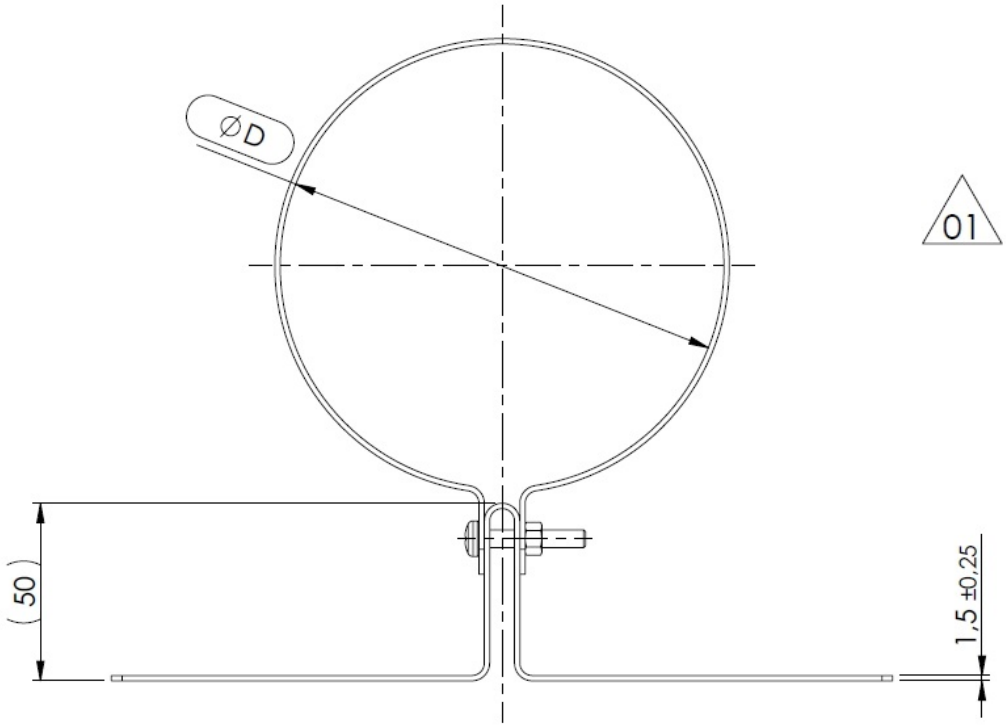

01	øD	X
	104	50
	114	60
	124	60
	144	50
	151	50
	161	50
	194	60
	214	60
	259	60
	309	60

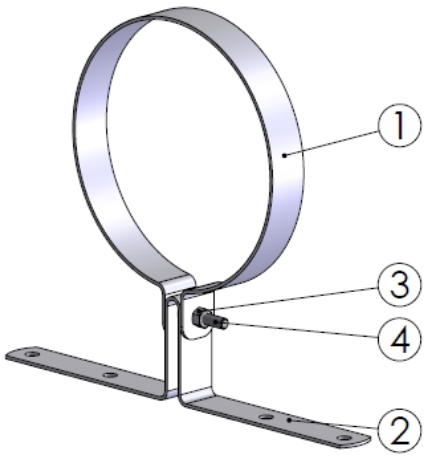

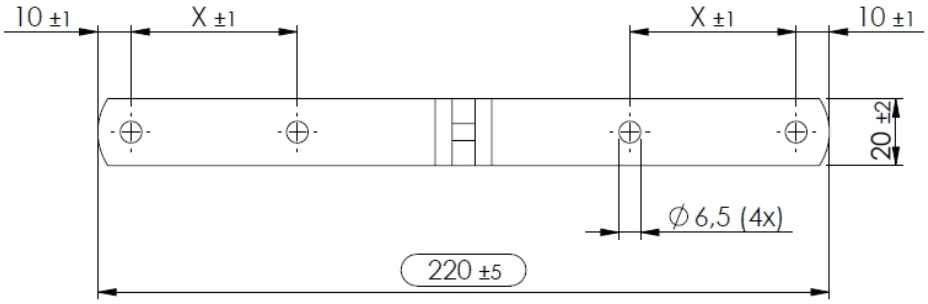

Pos.	QTY.	Description	Material
4	1	Bolt M5x30	Galvanized
3	1	Nut M5	Galvanized
2	1	Fixing bracket	DX52D
1	1	Bracket	DX52D

Hekon art. : COX300-PBEU