PRODUCTFICHE
FICHE PRODUIT

HEKON
JOUW EXPERT IN ROOKGASAFVOER

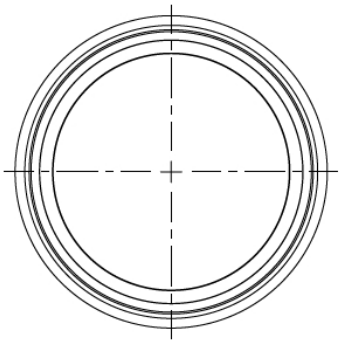

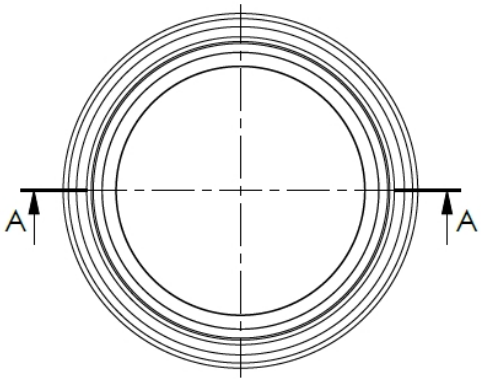

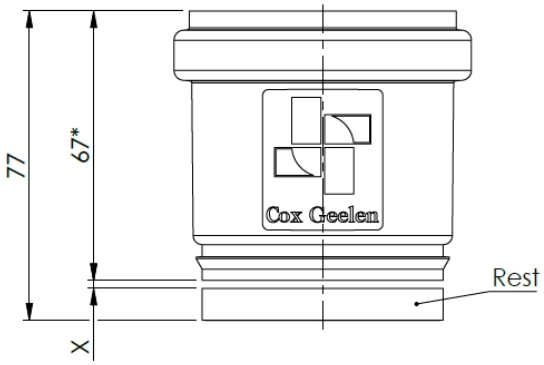

* Dimension includes 1mm melt
X = Sawcut

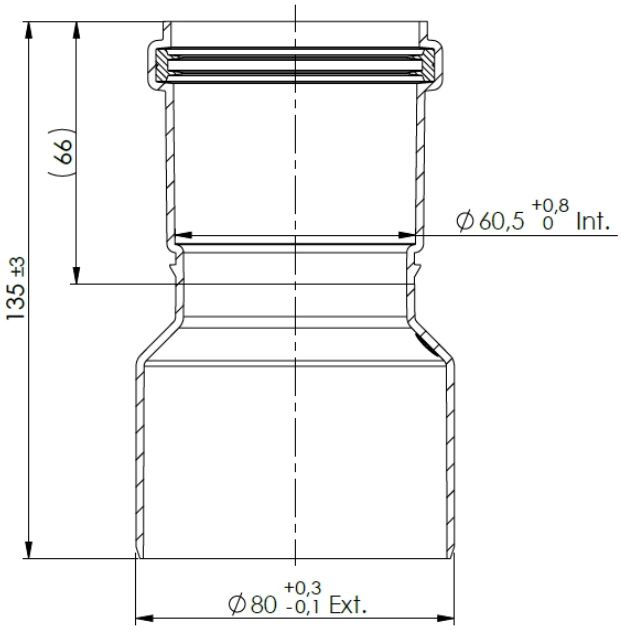

SECTION A-A

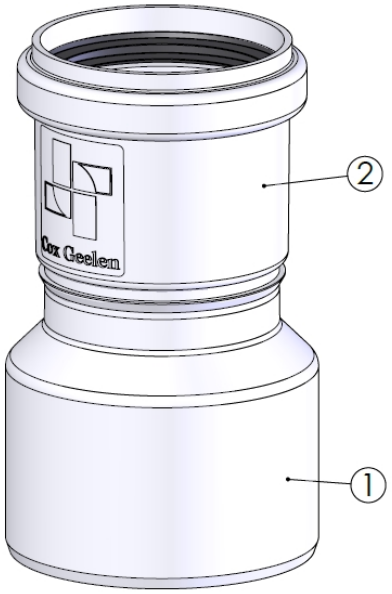

Pos.	QTY.	Description	Material
2	1	Socket ø60	-
1	1	Reduction ø80-60	CoxPP-BBA

Unit of measure: mm

Hekon art. : CD060G080K