PRODUCTFICHE
FICHE PRODUIT

HEKON
JOUW EXPERT IN ROOKGASAFVOER

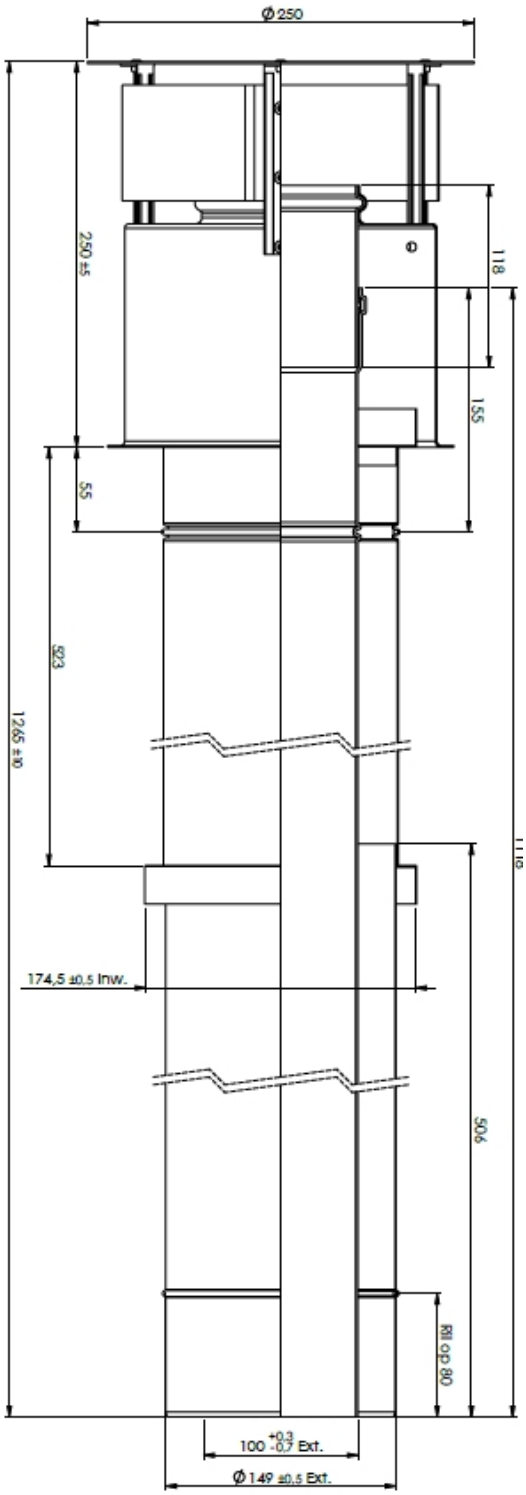

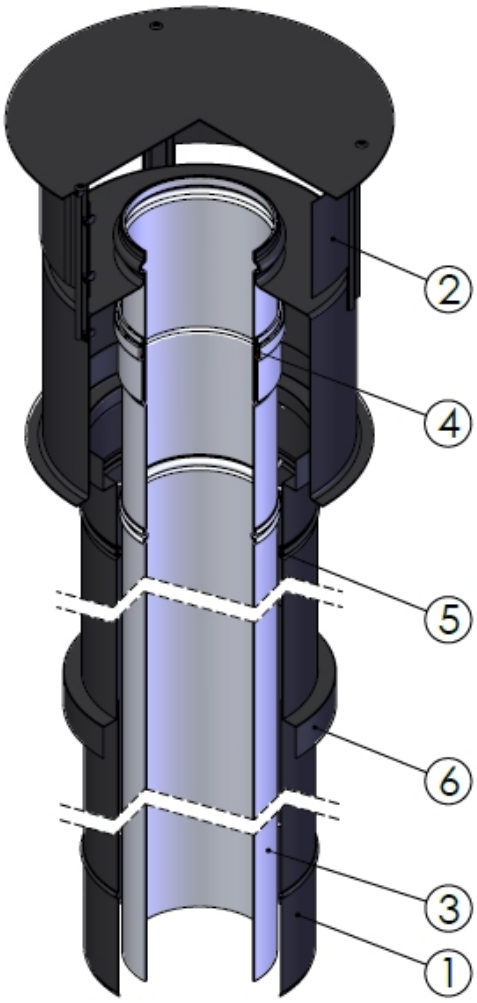

6	2	Cavity ring ø150	DX52D
5	2	Spring	AISI 301
4	1	Seal VMQ Flue gas ø100	VMQ Flue gas
3	1	Flue pipe	EN-AW-6060
2	1	Cap	
1	1	Air pipe	EN-AW-1050A
Pos.	QTY.	Description	Material

Hekon art. : GR100/150ADD