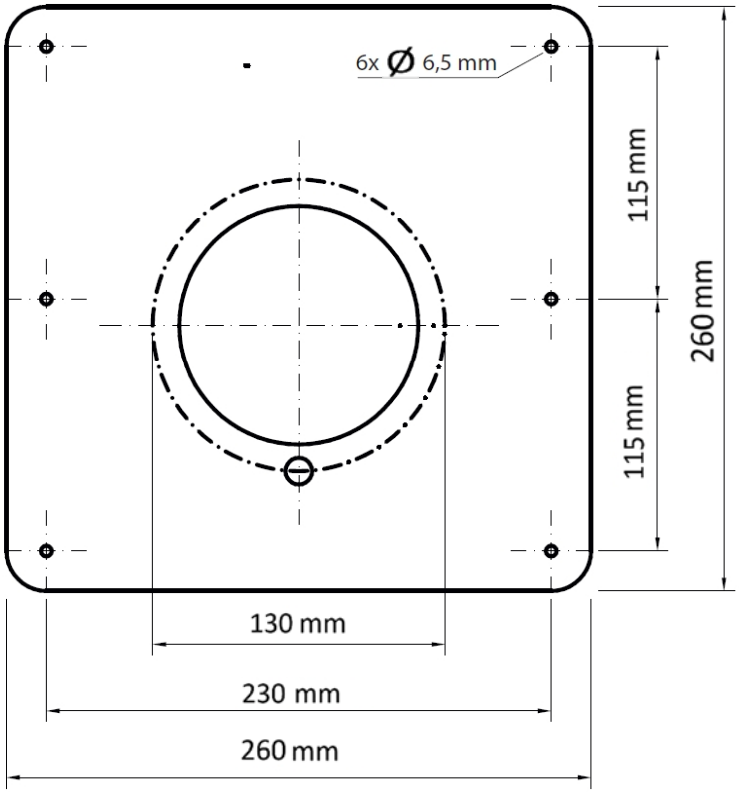

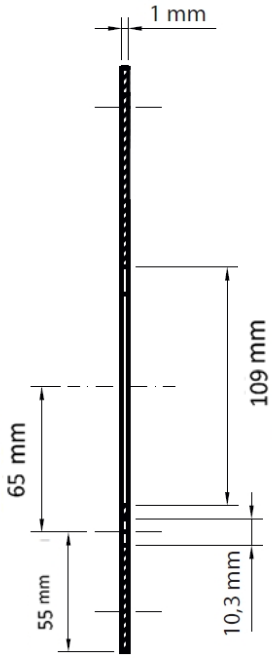

Unit of measure: mm

Hekon art. : PP120100-MR